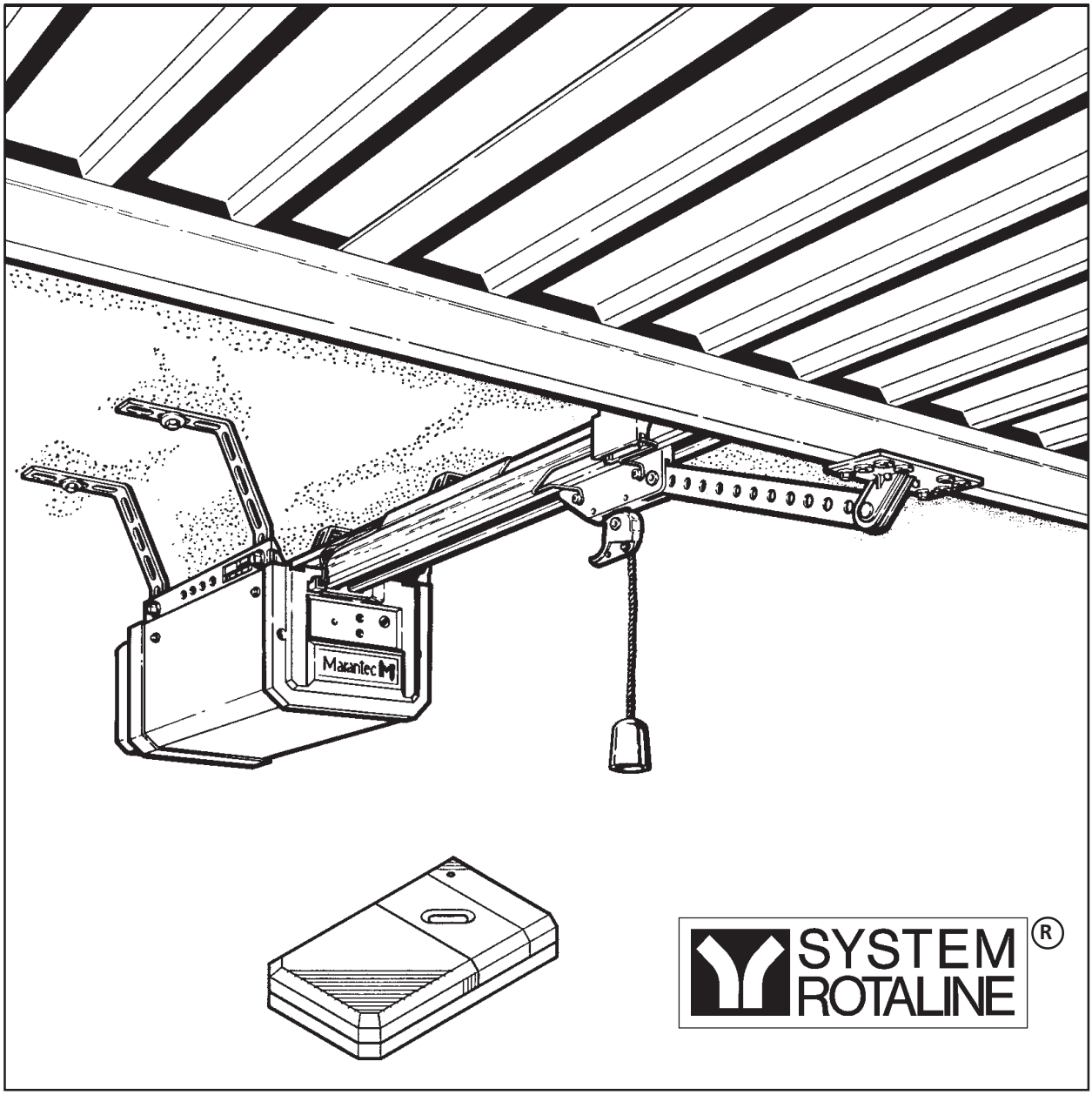

Comfort 100

Installation Instructions

Please follow the installation and fitting instructions carefully to avoid wrong installation or damage to the door and door operator. Keep these instructions for later reference.

1

Unpack the boom, motor housing and accessories ready for installation.

2

The following tools are required:

fork spanner SW 10
fork spanner SW 13
screw driver, size 8
screw driver, size 5
Phillips screw driver, size 2
masonary drill Ì 10 mm
masonary drill Ì 6 mm
metal drill Ì 5 mm
pliers
hack saw
electric drill

3 Boom Assembly - 2 piece version - LS 2125 KD and LS 3000 K

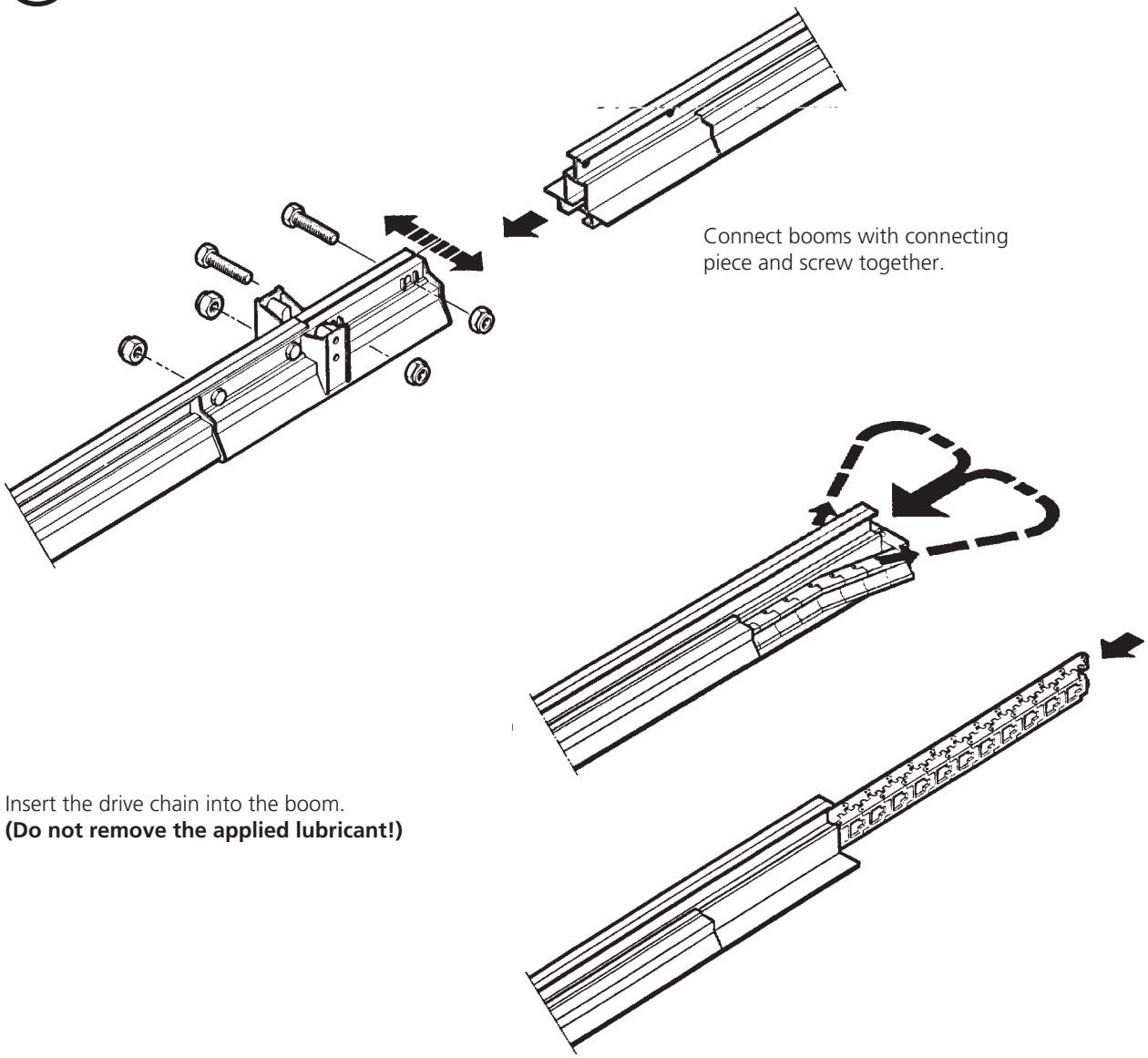

Connect booms with connecting piece and screw together.

Insert the drive chain into the boom.
(Do not remove the applied lubricant!)

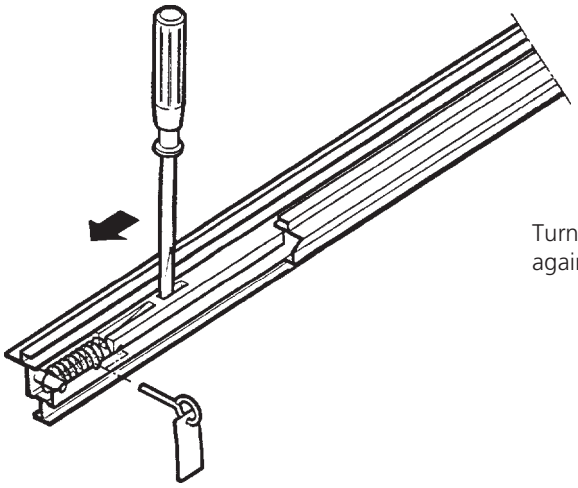

Turn the boom and use a screw driver to push the chain end link against the spring and insert the locking-pin.

4

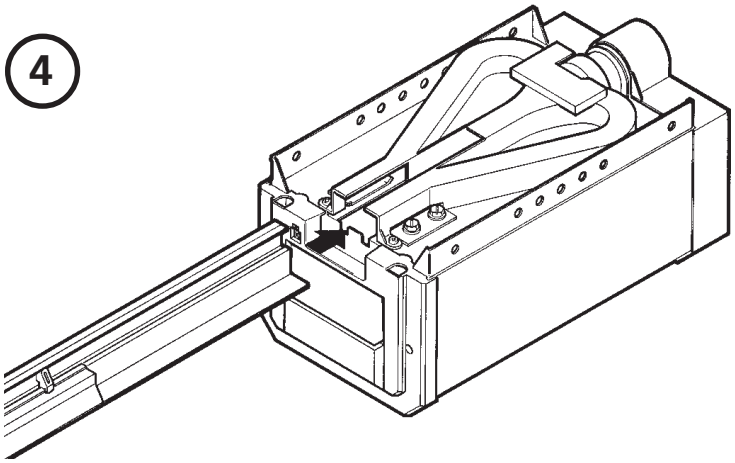

Slide the boom into the motor housing.

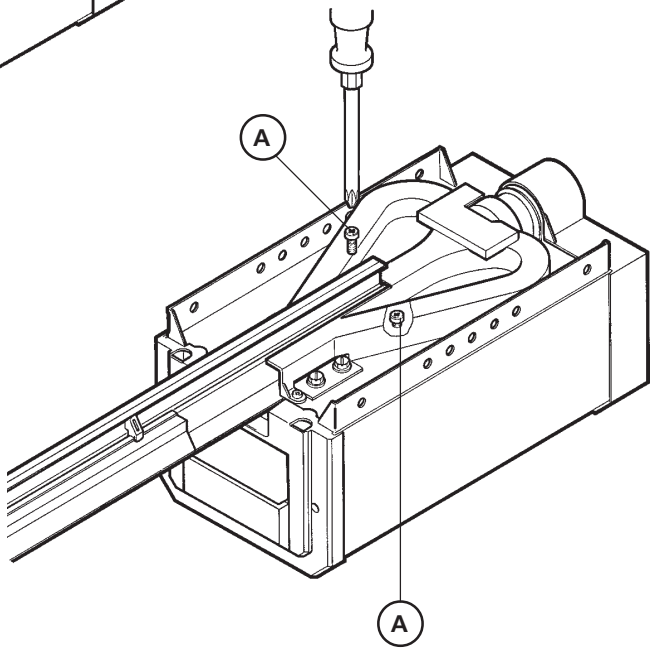

Screw the supplied centering screws (A) through the boom into the motor housing.

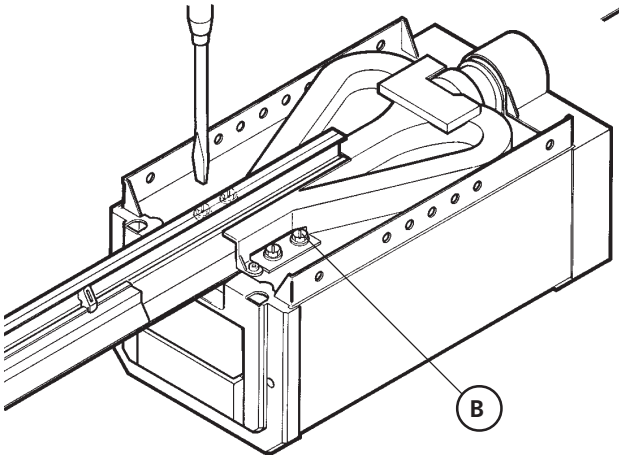

Screw on the 4 setscrews (B) tightly.

5

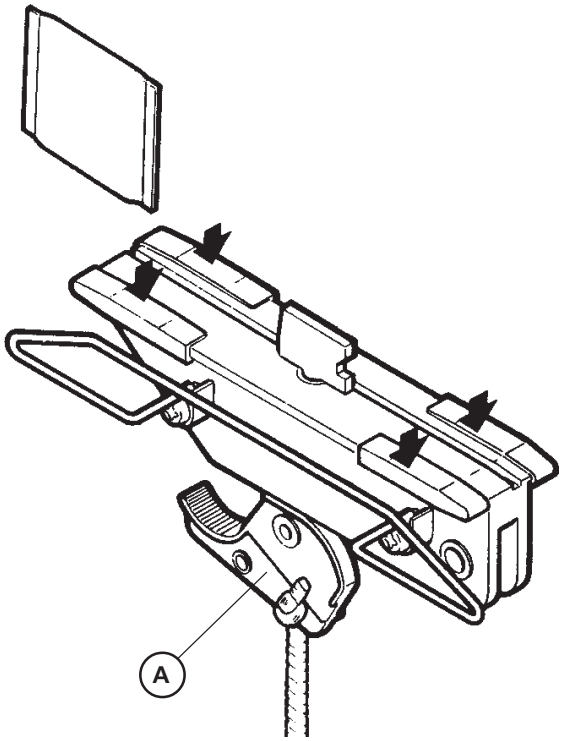

Grease the 4 carriage bearers with the supplied lubricant.

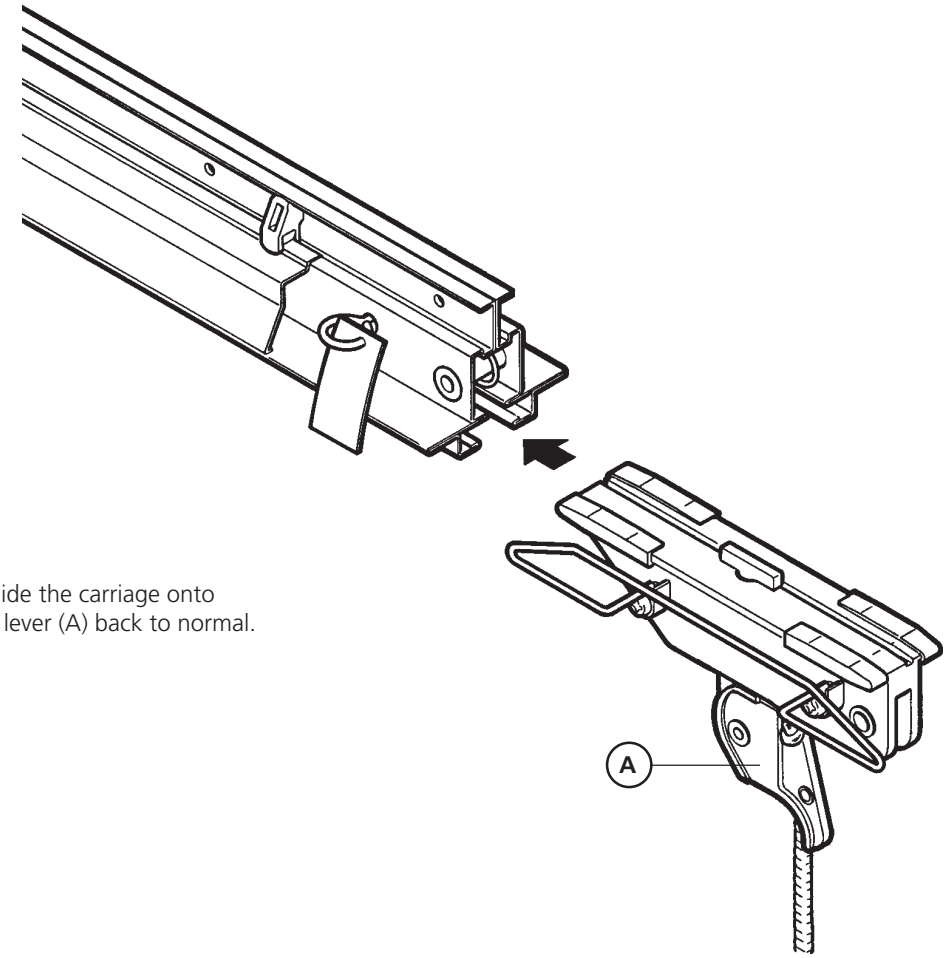

Push back the lever (A) and slide the carriage onto the boom before moving the lever (A) back to normal.

6

Remove the locking-pin (B).

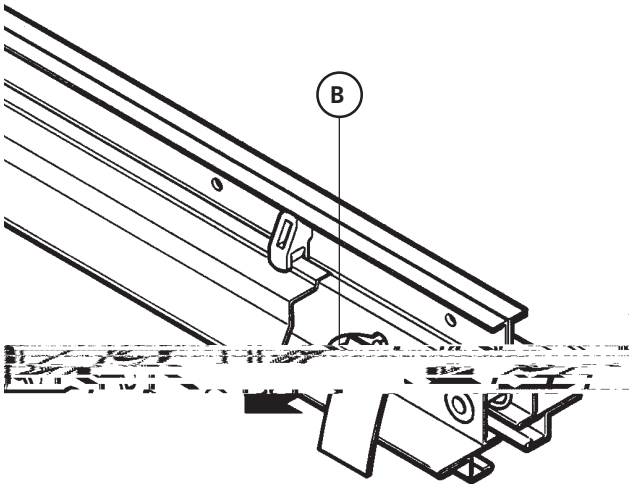

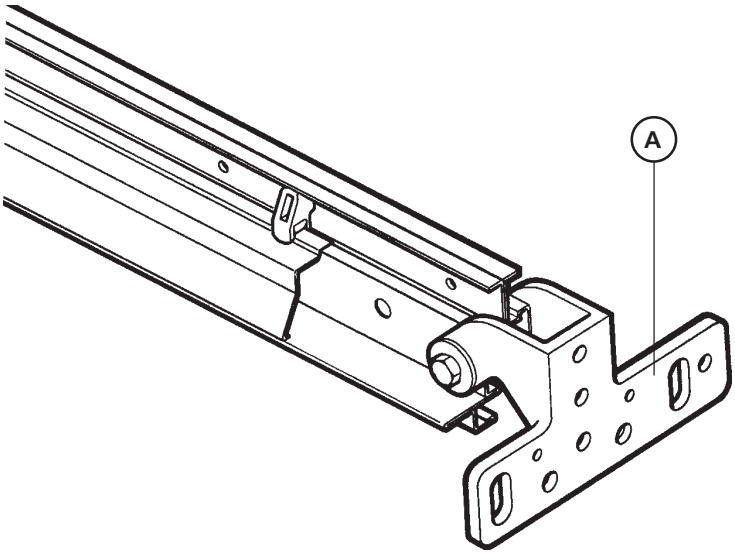

Screw the wall bracket (A) onto the boom.

7

Turn the screwdriver clockwise (about 5 turns) to force the chain to engage.

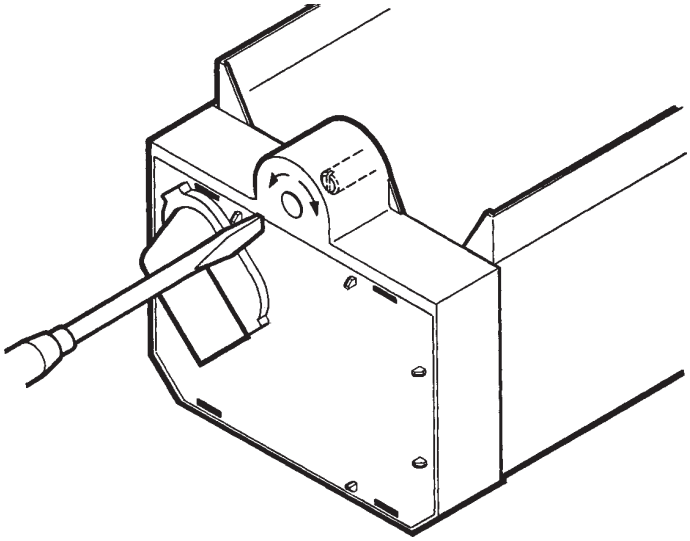

8

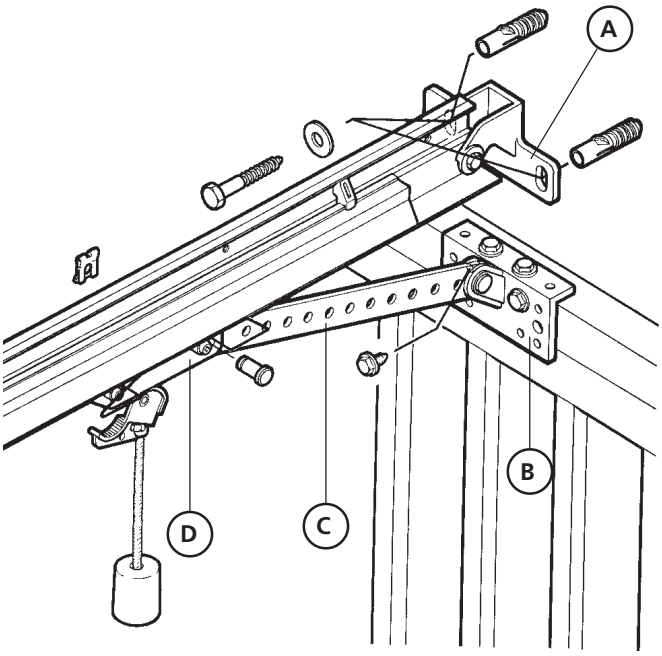

Up and Over Doors:

Screw the wall bracket (A) with boom onto the top surrounds or lintel. Make sure that the top edge of the door at its highest point of opening clears the bottom edge of the boom by 10 mm (see fig. 11)

Screw the door link bracket (B) onto the top edge of the door (5 mm drill). Connect the door link (C) to the carriage (D) and the door link bracket (B). Remove door locks or put them out of operation.

9

Sectional Doors:

Sectional door fittings are required: Item No. 564 611
(Not included in the Comfort 100)

I Fit the wall bracket (A) with boom to the lintel with wall plugs, positioning the top door section at its highest point of opening to clear the bottom edge of the boom by 10 mm (see fig. 11).

II Fix the door connector attachment (B) to the top door section. For steel sections, use a 5 mm drill.

- If necessary, the drive unit can be installed 200 mm off-center.
- In this case, the door connector attachment must be shortened (cut at point E). After shortening, install the door connector attachment upside down (cut edge on top).
- For wooden sections, use the supplied wood screws.
- For doors with center hinge, install the door connector attachment underneath the top hinge flap and adjust the lower hinge flap with the supplied spacers.

III Connect the 2-piece door link (C) to the carriage (D) and the door connector attachment (B).

Remove door locks or put them out of operation.

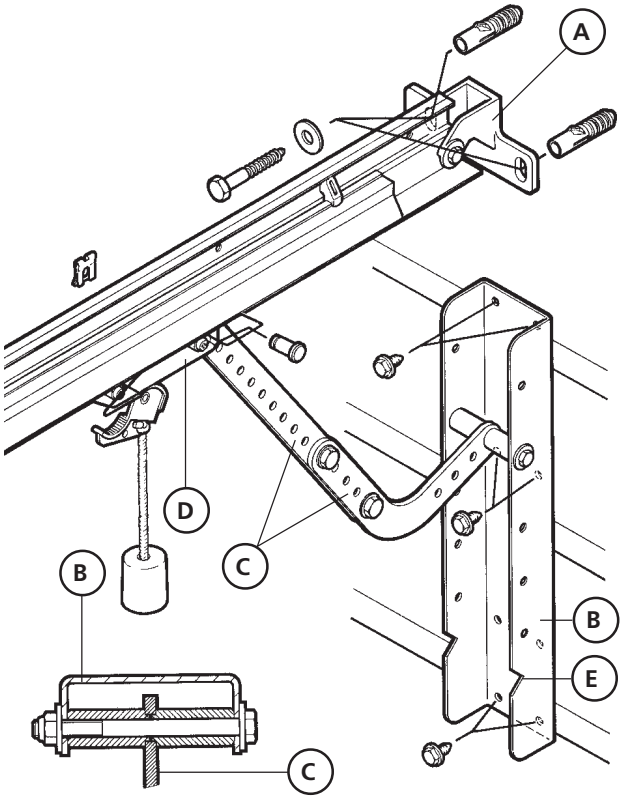

10

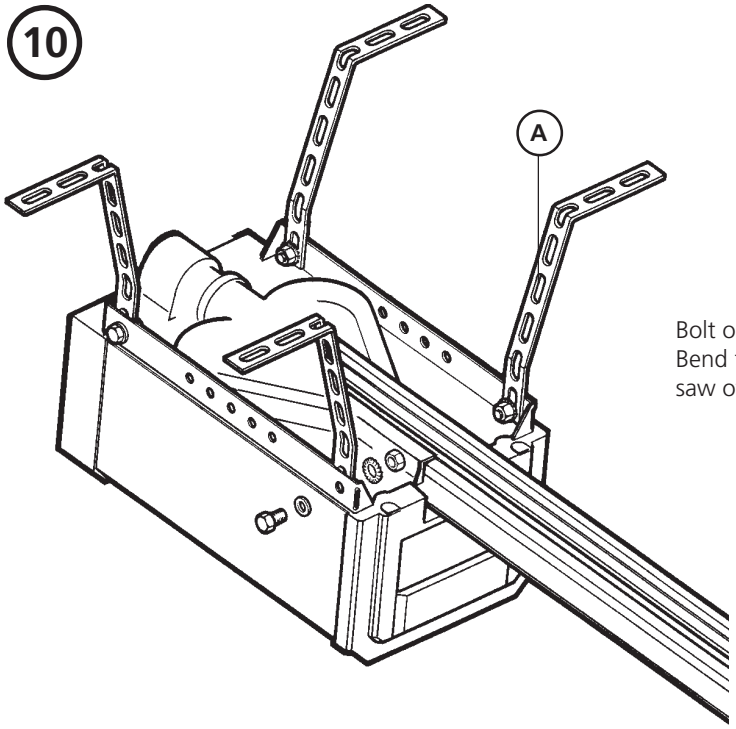

Bolt on the 4 support straps to the motor housing. Bend them according to your requirements and saw off the projecting lengths (see fig. 11).

2-piece version LS 2125 KD and LS 3000 KD:
Screw on 2 support straps to the connecting piece.

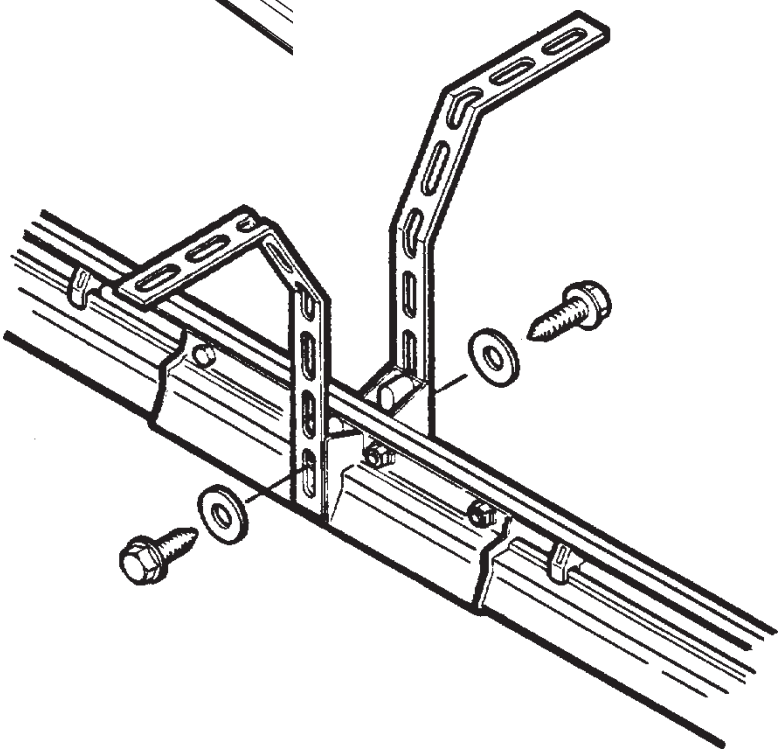

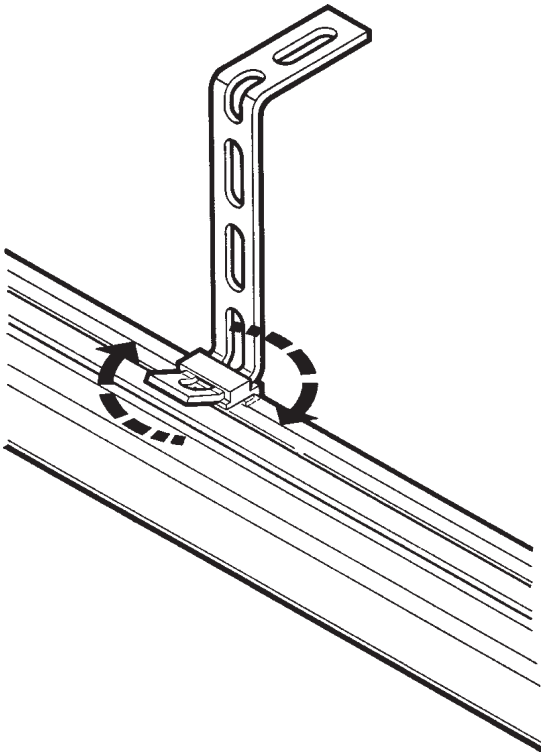

1-piece version LS 2125 and LS 3000:
Attach 1 support strap to the middle of the boom.

11

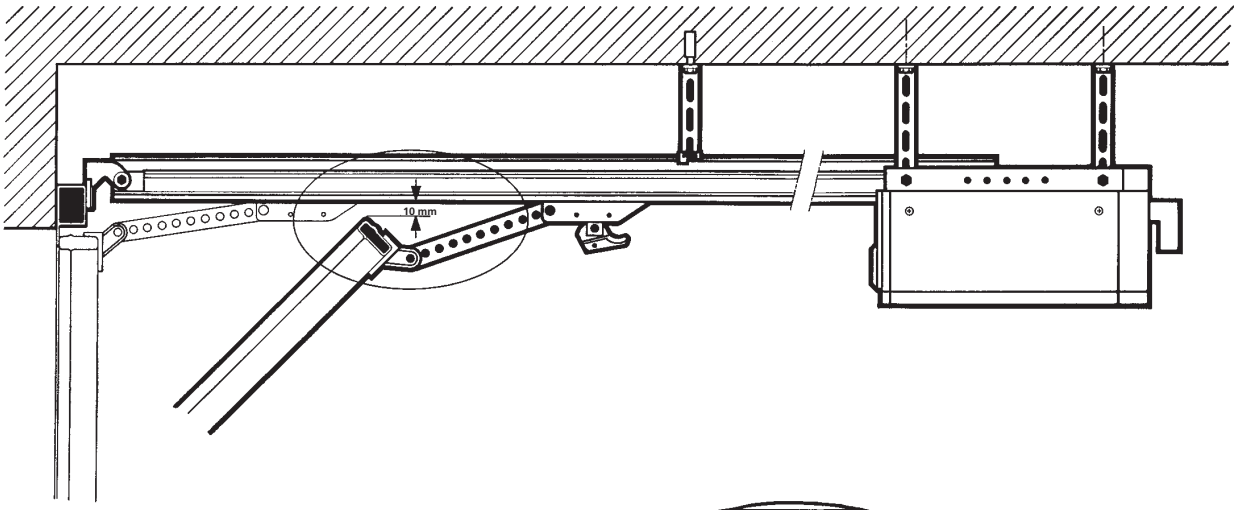

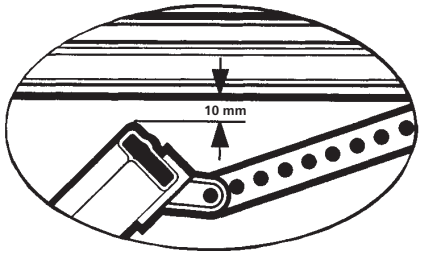

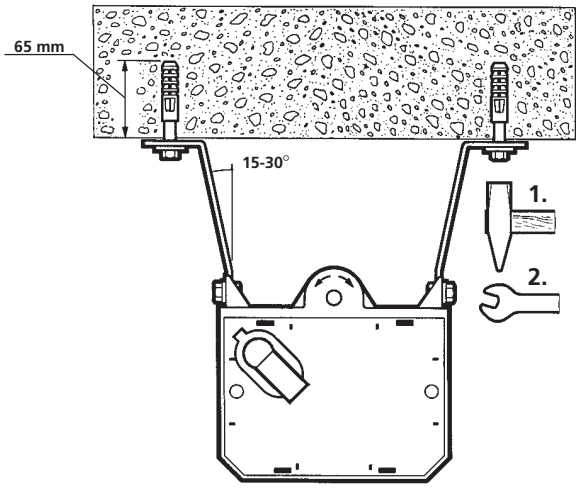

Bolt the motor housing and boom onto the ceiling, making sure that the top edge of the door at its highest point of opening clears the bottom edge of the boom by 10 mm (see fig. 8 and 9). Install the ceiling mounts as allowed by the constructional features of the garage (note drill depth for wall plug).

12

Clip the switch housing onto the boom. Engraved symbols show the door operation direction:
(A) = Limit switch "open" - mount in front of the motor housing
(B) = Limit switch "close" - mount in front of closed door
Adjust roughly and connect the limit switch plug to the plug socket (C) in the motor housing. Fine adjustment should be made after a test run.

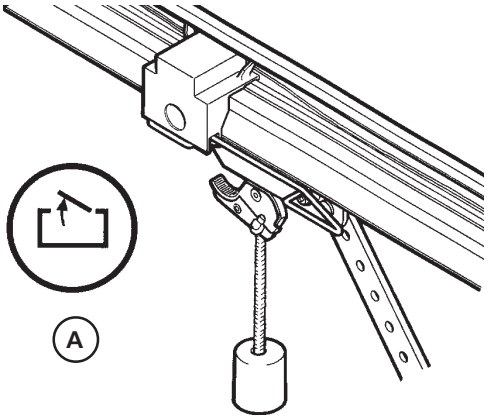

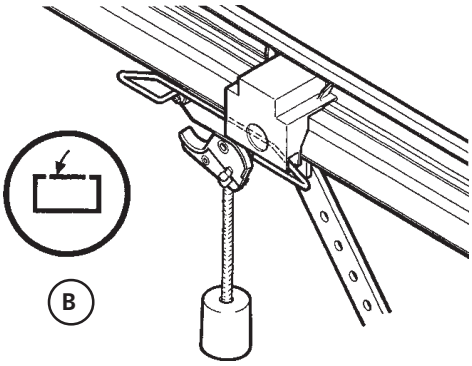

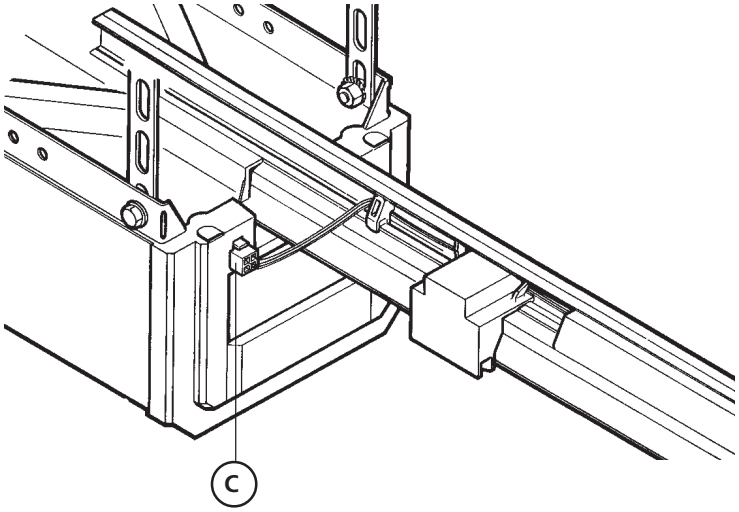

13

Insert the light bulb (max. 40 W) and clip on the lamp cover.
After impulse operation the light stays on for approx. 3 minutes.

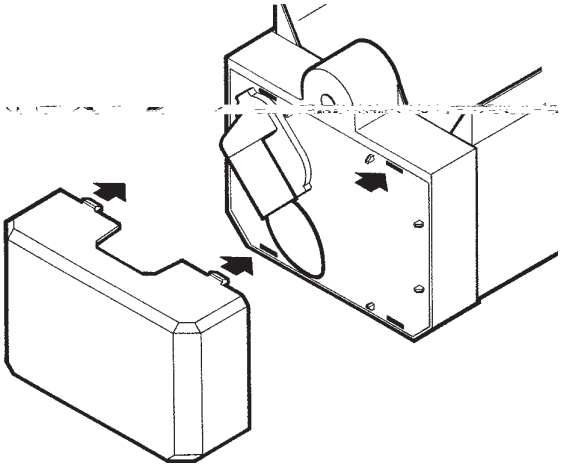

14

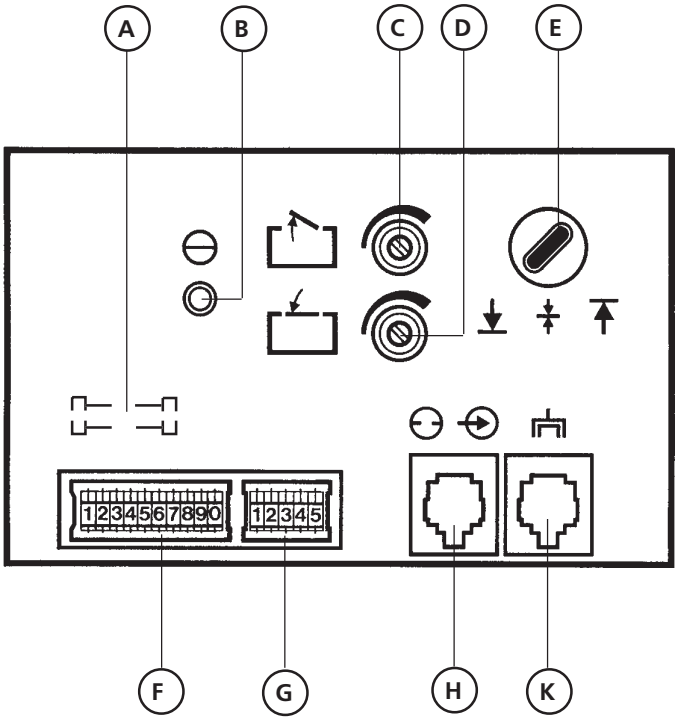

Electronic Controls:

A Fuse, max. 4 A. For access, first remove the mains plug and then the front cover.

B Multi-function operation lamp "green"
- Power supply: lights up when voltage and mains fuse are ok
- Impulse operation: flashes quickly when impulse is given from button or hand transmitter.
- Fault: flashes slowly when the automatic cut out is activated or when the door has not reached its final position after 45 seconds.

C Automatic cut-out adjusting screw "open". Turn clockwise for more pulling power.

D Automatic cut-out adjusting screw "close". Turn clockwise for more thrust power.

E Impulse button: 1st impulse = open, 2nd impulse = stop, 3rd impulse = close.

F 10 digit code switches for remote control (see fig. 19)

G 5 digit code switches (see fig. 20)

H Plug socket for "External Control Elements"

K Plug socket for "Electronic Aerial"

Test Run and Adjustment of the Automatic Cut-Out:

Connect the mains and activate the impulse button (E) for a test run. Adjust the limit switches by re-positioning the limit switch housings. Use the mini screwdriver clipped onto the inside of the front cover to adjust the automatic cut-out.

Adjusting screw C = door operating direction "open" (pulling power)

Adjusting screw D = door operating direction "close" (thrust power)

Turn clockwise for more pulling and thrust power.

Adjust the automatic cut-out to be as sensitive as possible.

Check its function regularly!

15

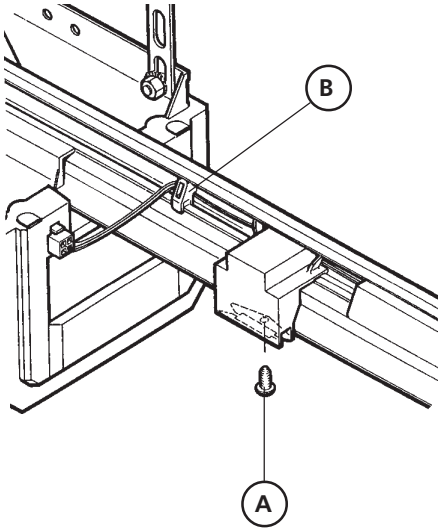

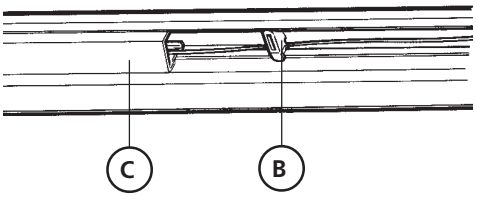

After test and fine adjustment, screw the limit switch housings to the boom using screw (A). Lay the limit switch cable along the boom under the clamps (B) which can be removed with a srewdriver. Store excess cable under the removeable cable covers (C).

16

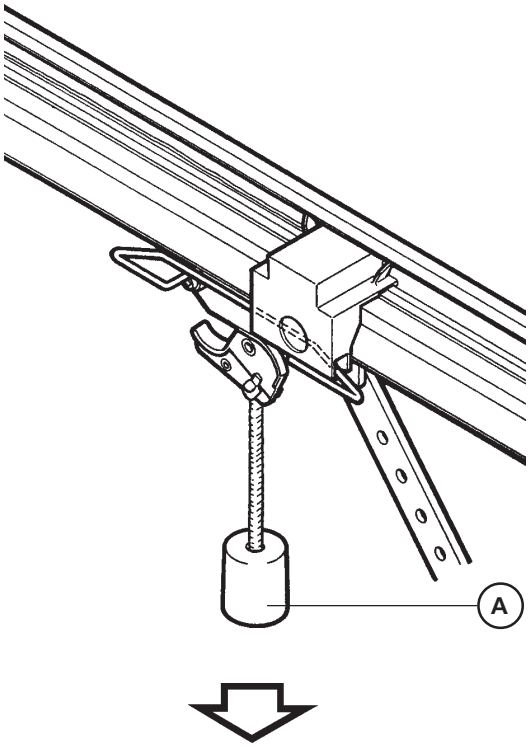

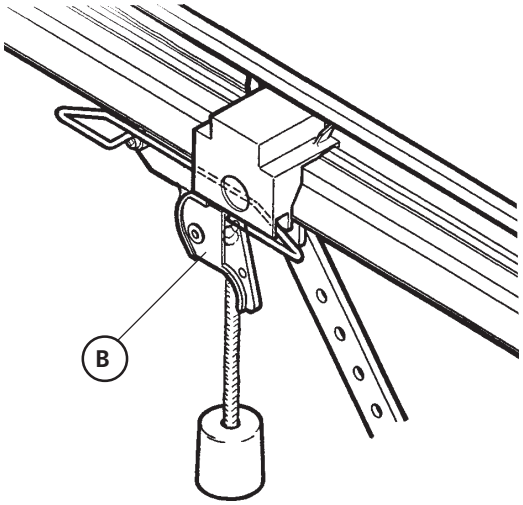

Quick Release:

Pull the cord (A) to separate the door from the drive.
When an impulse is given while the door is released, the carriage will automatically re-engage.
For a permanent separation of door and drive, pull back lever (B).

17

Hand Transmitter:

A Flashing battery control

B Operation button

C Battery compartment cover

D 9V Battery IEC 6F 22

To insert or change the battery, push the cover (C) to one side and slide back.
When changing the battery, be sure to pole correctly.

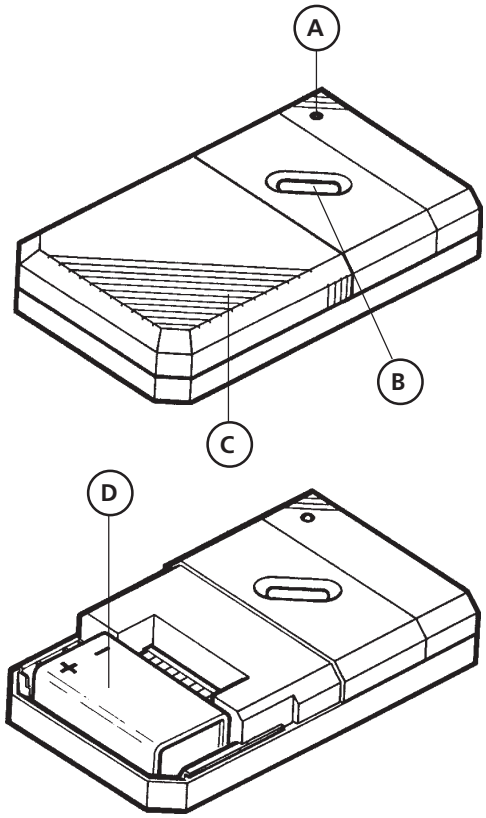

18

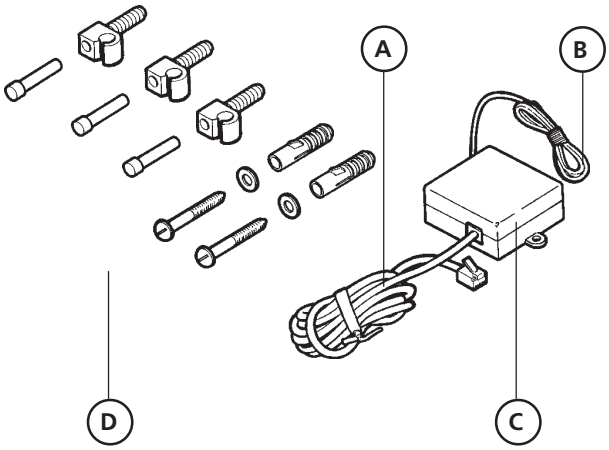

Electronic Aerial:

A Connecting cable to control unit with plug

B Aerial cordon

C Housing (with 2 holes for screw mounting)

D Fitting accessories

Plug the connecting plug into the electronic control unit (see fig. 19).
Unroll the connecting cable completely.
After coding and putting the hand transmitter into operation (se fig. 17 and 19/D), position the housing (C) to achieve a good range.
Install away from the door as steel doors have a screening effect.
When the optimum range is achieved, mount the housing to the wall or ceiling.
Roll out the aerial cordon (B) and align it.
The range may vary with different digital security codings.

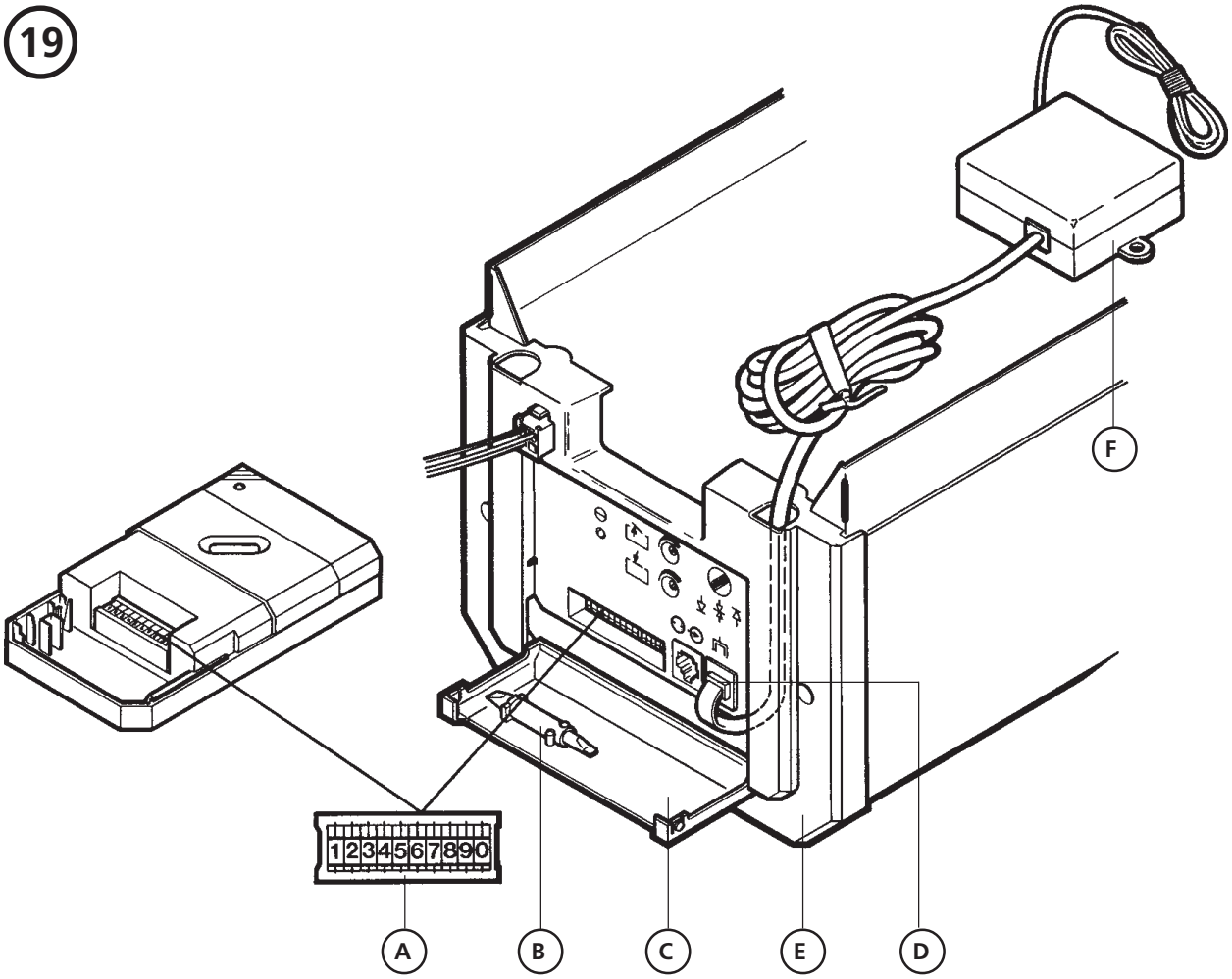

Connecting the Electronic Aerial and Coding the Hand Transmitter:

A 10 digit code switches (hand transmitter and control unit)

B Plastic screwdriver for setting code switches

C Control unit front cover

D Electronic aerial connecting plug

E Drive unit front panel

F Electronic aerial

Open the front cover (C). Feed the electronic aerial connecting cable with plug (D) through the drive unit front panel (E) and plug into the control unit as shown in the illustration.
There is a mini screwdriver inside the front cover for setting the code switches. The number combination (A) coded with the 10 digits in both control unit and hand transmitter have to be identical.
There are 1023 possible codes.
After plugging in the connection plug and completing the coding, close the front cover.
For adjusting the multi-channel hand transmitter see fig. 20.

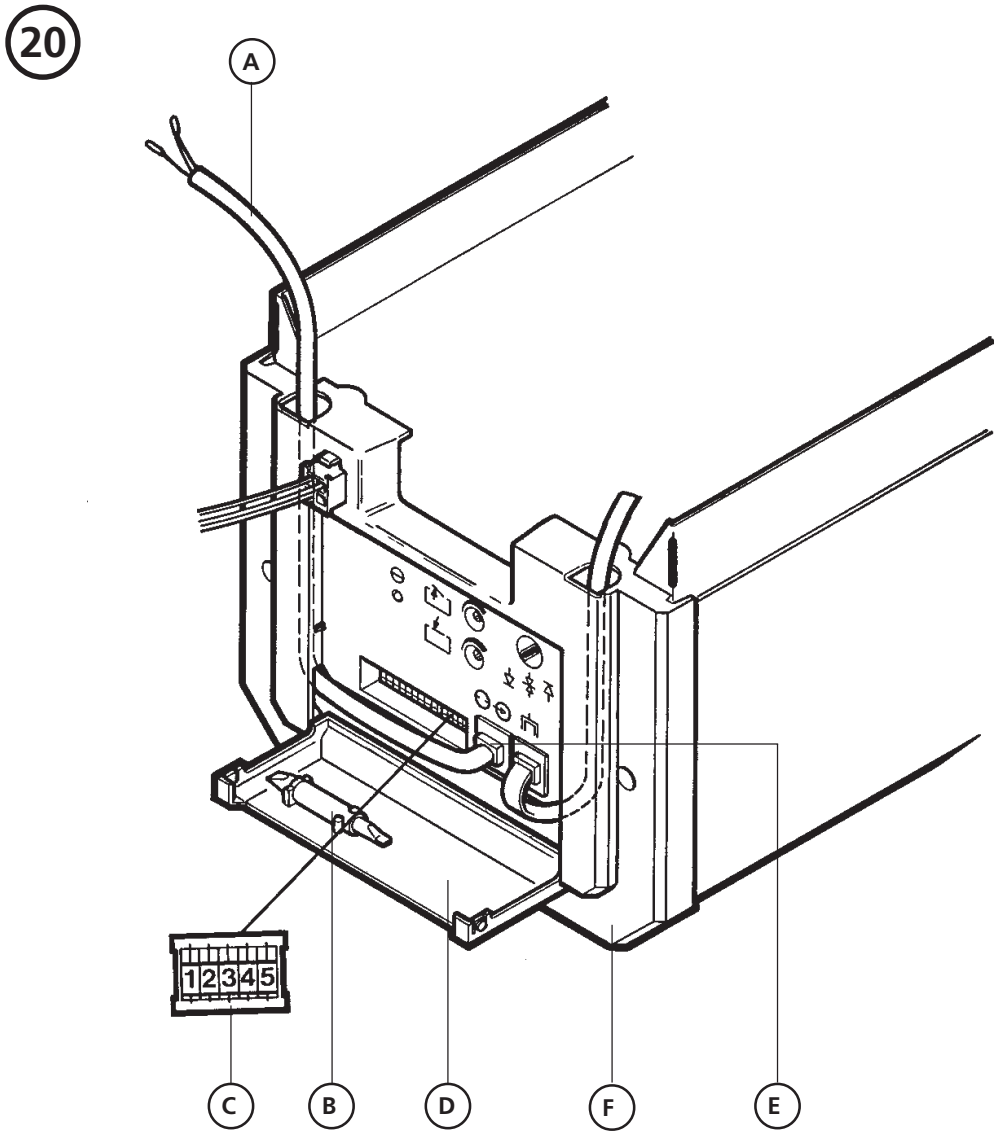

Connection of External Control Elements and Function of the 5 digit code switches

A Connecting cable for external control elements (impulse button inside or key switch outside)

B Plastic screwdriver for setting the code combination

C 5 digit code switches

D Control unit front cover

E Connecting plug for external control elements

F Drive unit front panel

Open the front cover (D). Push the connecting cable (A) for external control elements with plug (E) through the front panel (F) and plug into the control unit as shown in the illustration.

Functions of the 5 digit code switches (C):
1 Code switch for connecting external stop button
2 Code switch for connecting external photo cell
3 Adjustment for multi-channel hand transmitter button B
4 Adjustment for multi-channel hand transmitter buttom C
5 Adjustment for multi-channel hand transmitter buttom D

For setting the code combination, there is a plastic screwdriver clipped onto the inside of the front cover. After plugging in the connection plug and completing the coding, close the front cover.

21

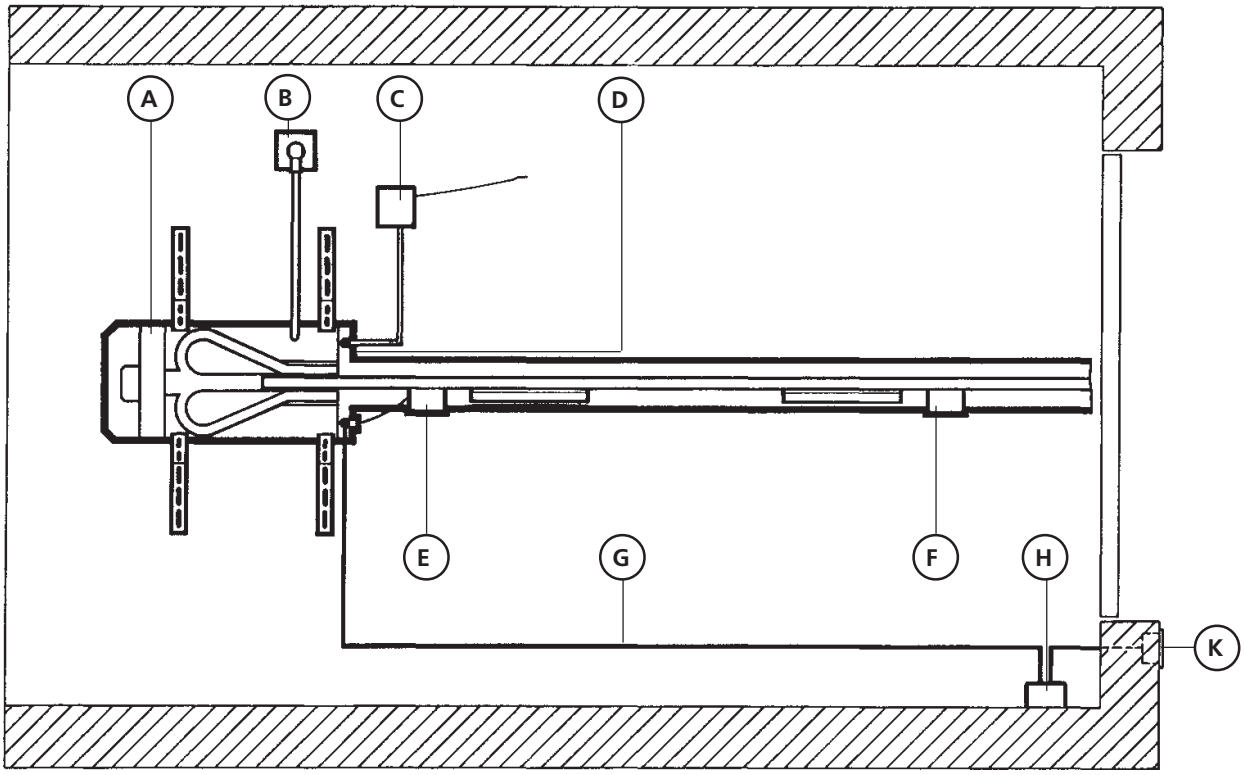

Cable Connecting Plan

A Comfort 100 door operator

B Socket with earth contact (Schuko) 220 V, 50 Hz

C Electronic aerial

D Comfort 100 control unit

E Limit switch "open"

F Limit switch "close"

G Connecting cable for external control elements

H Push button "impulse"

K Key switch "impulse", recessed version

22

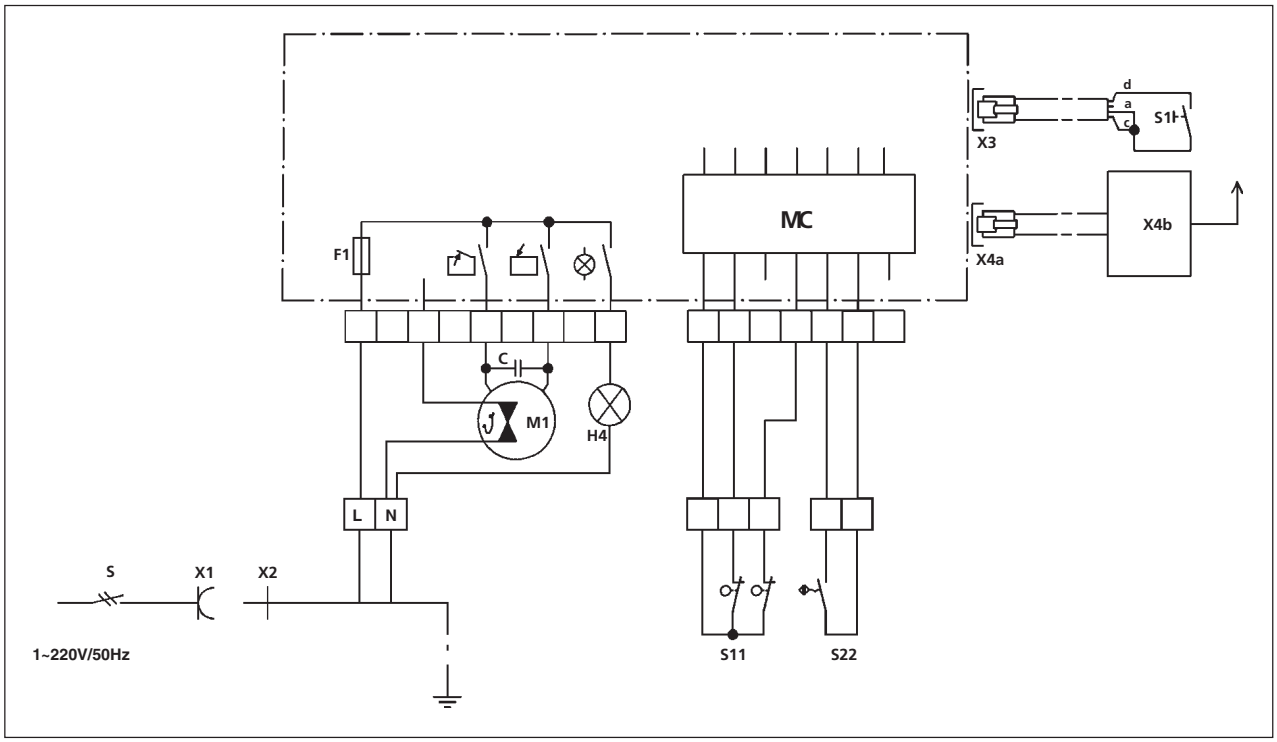

Circuit Diagram B-MC 100

C Condenser
F1 Fuse, max. 4 A.
H4 Operator lighting
M1 Motor with thermal protection
S Main switch or button "emergency-off"
S1 Push button "impulse"
S11 Limit switch "open"
S13 Limit switch "close"
S22 Reed contact "rate of revolutions"
X1 Safety plug socket
X2 Safety plug
X3 Plug socket "External Control Elements"
X4a Plug socket "Electronic Aerial"
x4b Electronic Aerial

a BLUE cordon
b GREEN cordon
c RED cordon

IMPORTANT: Low voltage!
External voltage at the plug sockets will completely destroy the electronics.

IMPORTANT: Follow the local safety regulations!
Always lay mains cable and control cable separately.

23

Test Instructions (only for professional tradesmen)

Trouble shooting:

Fault	Reason	Elimination
No green light on multi-function operation lamp.	No voltage.	Check mains supply. Check socket. Check operator mains fuse (see fig. 14A).
	Thermal protection is activated.	Allow the motor to cool down.
	Defective electronics.	Cut off mains supply. Unscrew front panel and pull back slightly. Remove connecting plug and take off front panel with circuit board. Have the electronic controls checked.
Multi-function operation lamp flashes slowly. -Fault-	Automatic cut-out adjusted too sentitively. Door operation too sluggish. Door blocks.	Adjust control screws (fig. 14/C "open" and 14/D "close") clockwise to make automatic cut-out less sensitive. Ensure door moves easily.
	Final position of door not reached after 45 seconds. Creaking noise.	Operator is unlatched (see fig. 16). Move the door in "half open" position and give impulse.
	Drive is blocked mechanically.	Cut off mains supply. Turn drive shaft with screwdriver through the opening above the lamp cover (see fig. 7).
No reaction on impulse.	Terminal blocks for impulse button bridged, e.g. due to shortcircuit or wrong terminal connection.	Isolate cabled key switches or push buttons from control unit for a test run. Remove plug (see fig. 14H). Look for cable fault.
	Code switch for stop button (see fig. 20/1) switched on but stop button not connected.	Switch over code switch (see fig. 20/1) or connect stop button.
Drive only in "open" but not in "close" direction.	Code switch for photo cell (see fig. 20/2) switched on but photo cell not connected.	Switch over code switch (see fig. 20/2) or connect photo cell.
Multi-function operation lamp does not flash quickly on impulse from push button or hand transmitter	Electronic aerial disconnected.	Connect aerial to control unit (see fig. 19).
	Code combination of hand transmitter not identical to receiver combination.	Check code combinations (see fig. 19).
	Flat battery.	Insert new 9V battery IEC 6F22 (see fig. 17). LED on transmitter shows battery condition.
	Hand transmitter, control electronics or electronic aerial defect.	Have all 3 components checked.
Insufficient range of hand transmitter (less than 5 m)	Flat battery.	Insert new 9V battery IEC 6F22 (see fig. 17). LED on transmitter shows battery condition.
	Wrongly positioned electronic aerial.	Re-position the aerial housing. Ensure the cable connecting to the control unit is rolled out at full length. Position well away from the door. Mount the aerial to the side or back in opposite direction of the boom. Also align the aerial cordon and, if possible, let it hang freely.

24

Putting into Service

For industrial use, power-driven windows, doors and gates have to be tested by a specialist before being put into service, as required and at least once a year.

Maintenance Instructions

The Marantec Comfort 100 Door Operator is almost maintenance-free. However, all moveable parts of the door and operator system should be checked regularly and kept in an easily movable condition. The door must be easy to operate manually. The separate door weight balance mechanism must be checked regularly.