CS 310

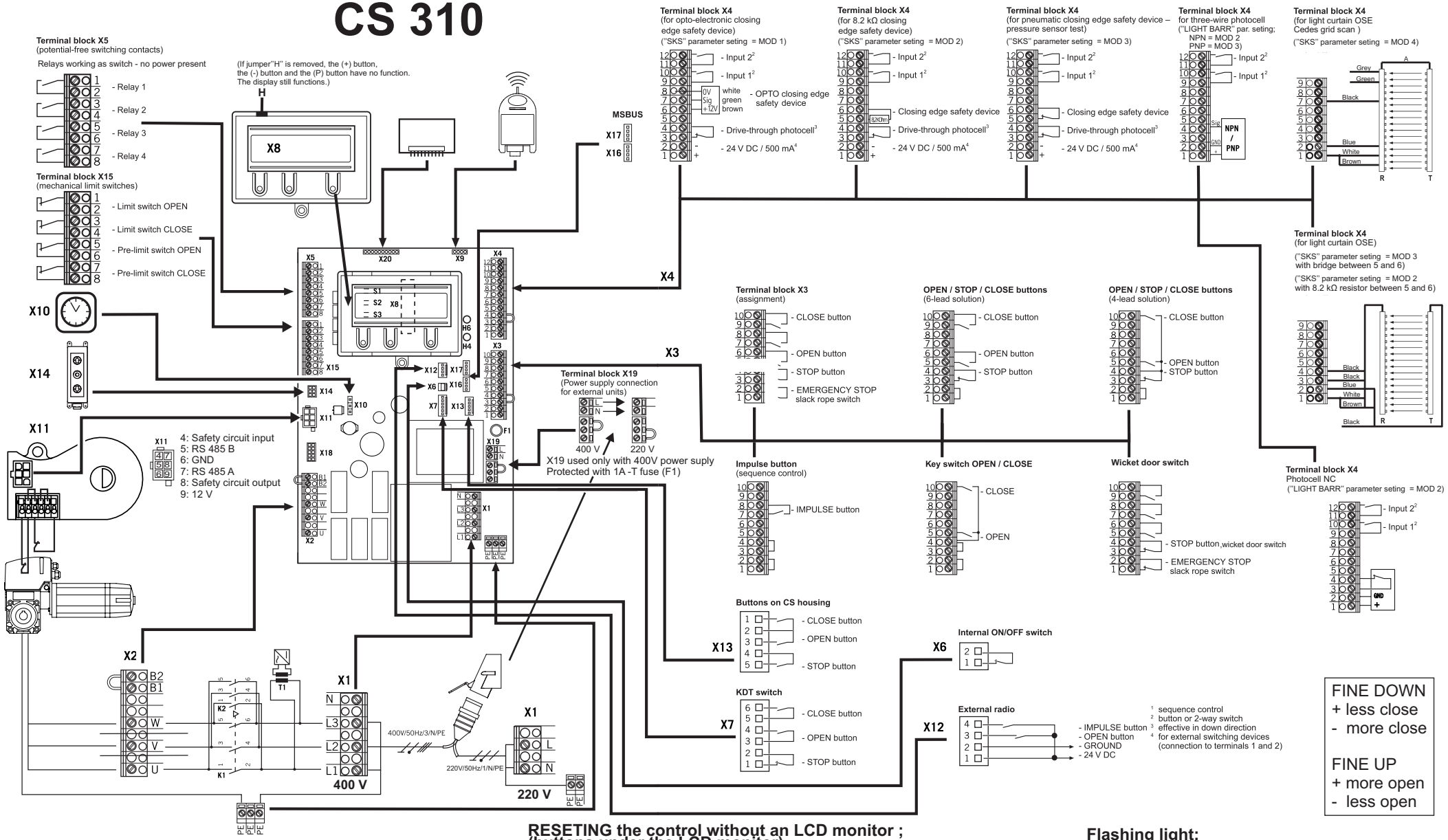

FINE DOWN
+ less close
- more close

FINE UP
+ more open
- less open

Changing the direction of travel;

Press button (P) until ADJUSTMENT appears

Press buttons (+) and (-) at the same time and hold for longer than 5 sec. The display shows,''ROT FIELD LEFT''.

Any end position that have been saved will be deleted. Continue wit setting the end positions.

RESETING the control without an LCD monitor ; (buttons under the LCD monitor)

Disconnect the system from the power supply and unplug LCD monitor.

Press the circuit board buttons (P) and (-) at the same time and keep them preesed.

Switch the power supply back on again.

Keep buttons pressed until the red LED (H6) flashes quickly.

Release the both buttons.

The initialisation phase will taken the place for cca. 60 sec.
End positions have been deleted and all parameters have been reset to their factory default settings.

Flashing light;

Use relay 1,2,3 or 4 on Terminal block X5. Depending on the flashing light connect the power supply (24 +) or (220 L) in the relay and out to light. Power supply (24 -) or (220 N) connect directly to light. (400V => X19)

Set relay mode to MOD2
(check on TL REST setting in INPUT menu. It should be MOD1)